X-ray detector development at Cornell

DESY Joint Instrumentation Seminar
Kate Shanks – ksg52@cornell.edu
October 24, 2019

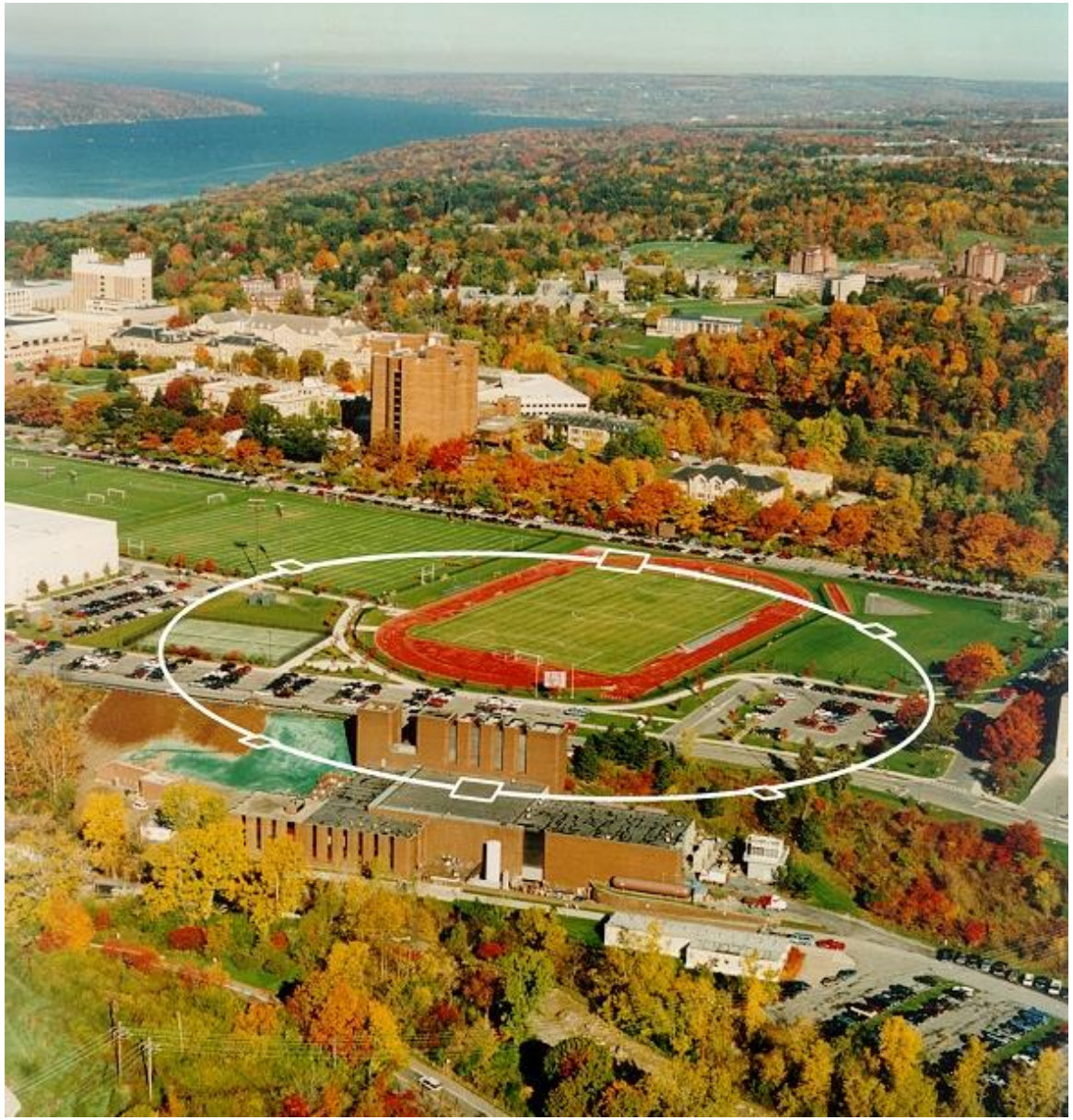

Outline

- **Detector activity at Cornell**

- **Photon-integrating hybrid pixel array detectors for x-ray science**
  - **Scientific aims**
  - **Technology focus**

- **What's happening in the Gruner detector development group:**
  - **Wide dynamic range imaging:**
    - MM-PAD
  - **Burst-mode imaging:**
    - Keck-PAD

Detector activity at Cornell

Photon science

- Development of photon-integrating area detectors
- **Frame rate** and **dynamic range** are major design focuses
- Close connection with the Cornell High Energy Synchrotron Source (CHESS):
  - National x-ray user facility, 6 GeV ring
  - Recent upgrade focused on delivering high-energy x-rays (20-100 keV)

HEP

- Tracker forward pixel detector (TFPX) for CMS HL-LHC upgrade
- **Radiation hardness** is a major design focus
- Starting to forge connections between the photon detector and HEP groups (Julia Thom-Levy, Divya Gadkari)

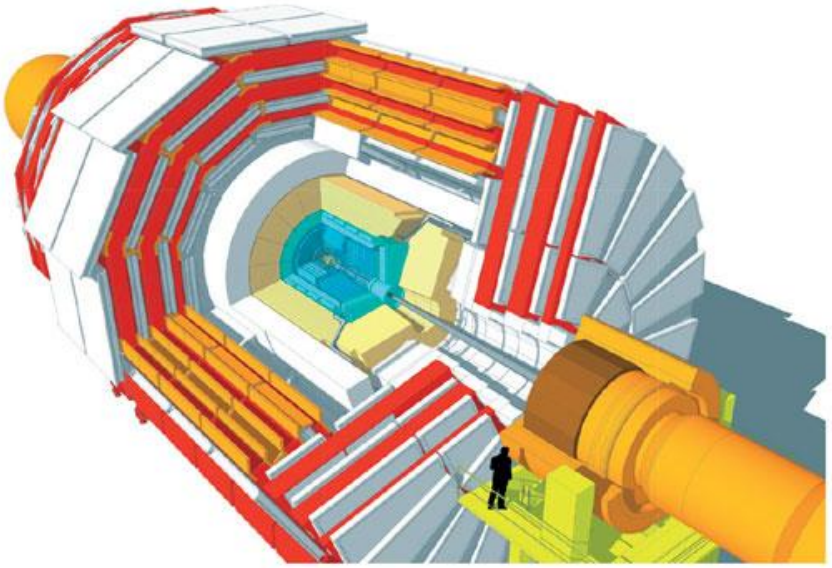

Detector activity at Cornell

High Energy Physics

- Energy scales : ~GeV
- Tracking, vertexing and resolution between tracks
- Detect Minimum Ionizing Particles (MIP's)
- Radiation : neutrons, protons, pions
- Thickness : 270 μm,
  Pixel Size : 100 μm x 150 μm

X-ray Physics

- Energy scale for photons : ~keV
- Measuring spectrum, flux, spatial distribution
- Absorbing particle in the bulk
- Radiation : x-rays
- Thickness : 500 μm
  Pixel Size : 150 μm x 150 μm

4

Accelerator-based x-ray sources

X-rays provide a means to probe matter at the atomic scale

Accelerator-based sources provide highly brilliant, pulsed beams and enable a diverse range of experiments and techniques

	Storage ring	XFEL
Avg. brilliance (x-rays/s/mm^2/mrad^2/0.1% BW)	~10^{20}	~10^{22}
Peak brilliance (x-rays/s/mm^2/mrad^2/0.1% BW)	~10^{24}	~10^{33}
Pulse duration	10-100 ps	10-100 fs
Repetition rate	MHz–500 MHz	60 Hz–4.5 MHz

Structural biology

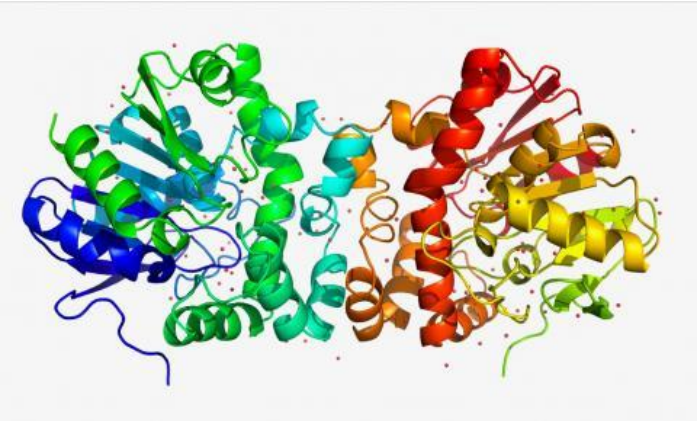

Materials science

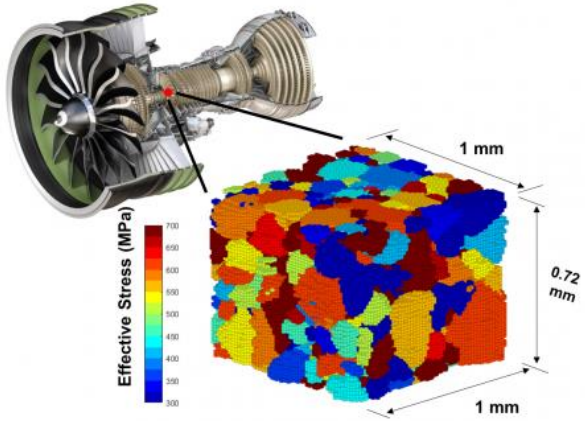

High-res. image reconstruction

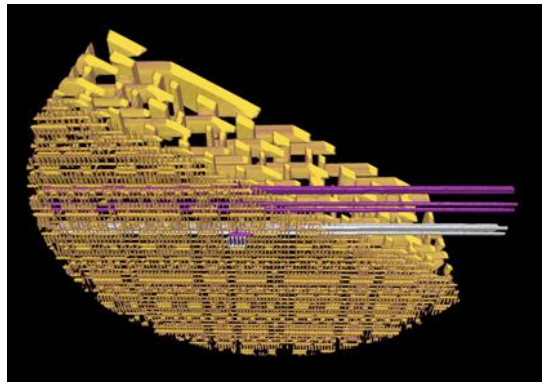

Holler et al, Nature, 2017

Cultural heritage

Outline

- Detector activity at Cornell

- **Photon-integrating hybrid pixel array detectors for x-ray science**
  - **Scientific aims**
  - **Technology focus**

- What's happening in the Gruner detector development group:
  - Burst-mode imaging:
    - 100x92 PAD
    - Keck-PAD
  - Wide dynamic range imaging:
    - MM-PAD

X-ray detectors for photon science: scientific aims

- **Our goal: enable experiments at synchrotron light sources that are challenging or impossible with standard area detectors**

- **Focus at Cornell: advances in frame rate, dynamic range, high-flux performance**

- **Example applications: coherent diffractive imaging/ptychography, time-resolved studies of systems on the µs-ms timescale**

Applications: Coherent diffractive imaging

Image reconstruction of an extended object with 10s of nm resolution

Example 100 ms frame

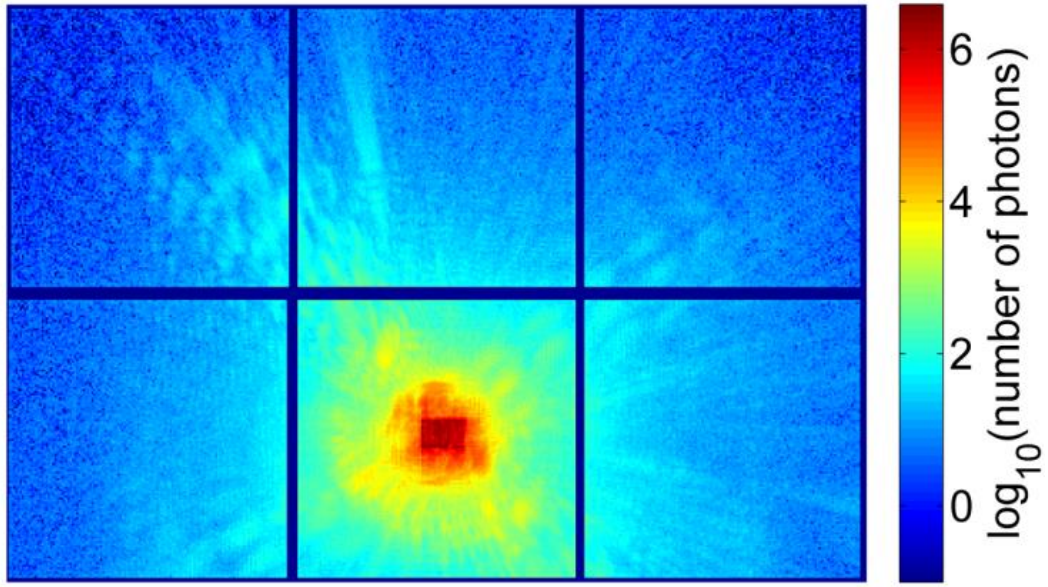

Phase reconstruction

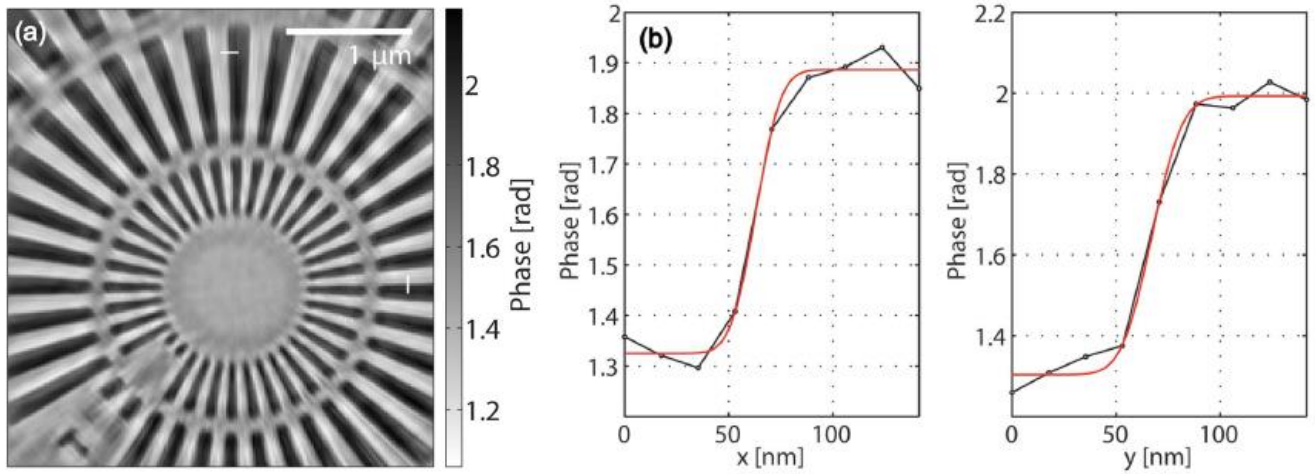

Giewekemeyer *et al., Journal of Synchrotron Radiation* (2014) **21,** 1167-1174

- PETRA III P10 w/Mancuso group (European XFEL)
- Key detector features:
  - **Wide dynamic range + low noise:** essential to obtaining accurate phase reconstruction
  - **High flux capability:** less attenuation needed -> fast scanning, high throughput

Applications: Microsecond dynamics

Deformation of metal compounds under high strain rates

Kolsky bar apparatus

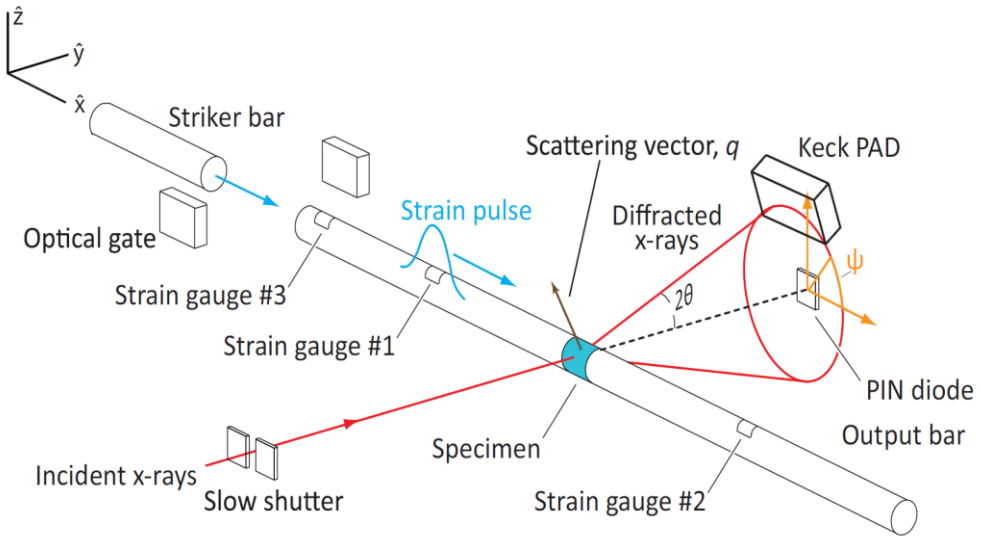

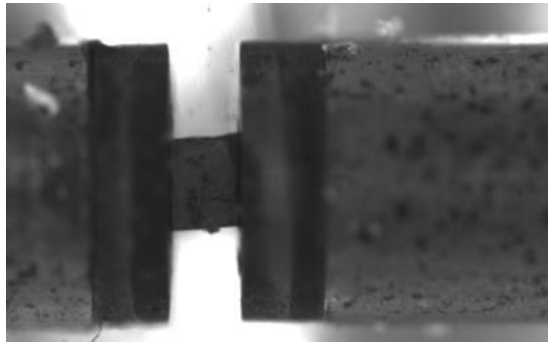

Optical video, 1 million FPS

- CHESS G3 with Hufnagel group @ Johns Hopkins & Army Research Office
- Key detector features:
  - **Fast frame rate**
  - **Good single-photon SNR**

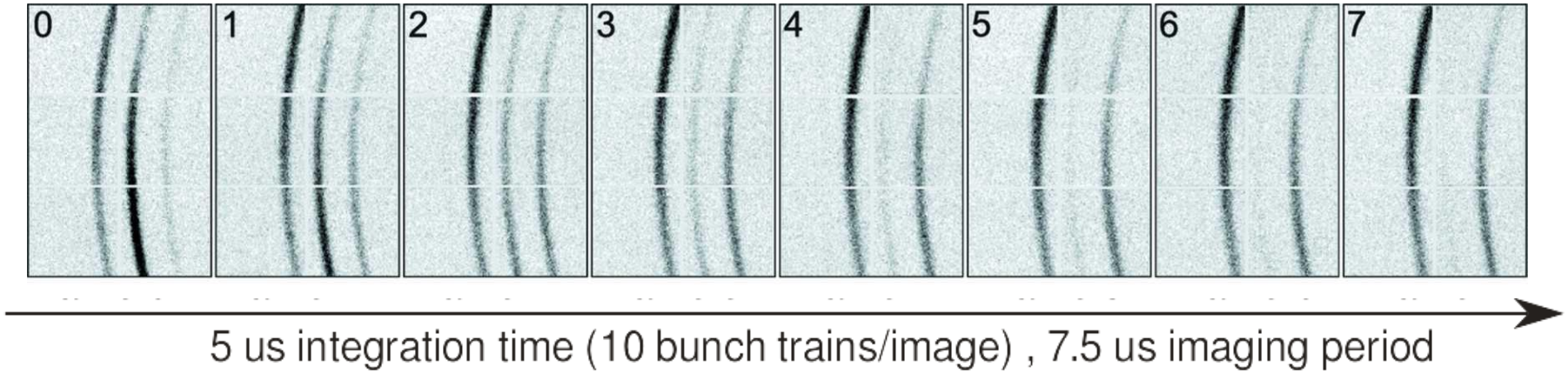

Husted *et al., Journal of Dynamic Behavior of Materials* (2018)

Demands on area detectors

- **Fast readout (kHz and above)**
- **High SNR for single-photon detection**
- **Wide dynamic range**
- **Efficient detection over a broad energy range**
- **Ability to tolerate high instantaneous flux**
  - **Unavoidable at XFELs**
  - **…but also an issue at today's storage rings:**
    - Typical storage ring pulse width: ~10-100 ps
    - 2 photons/pulse: **>2x10^{10} ph/s**

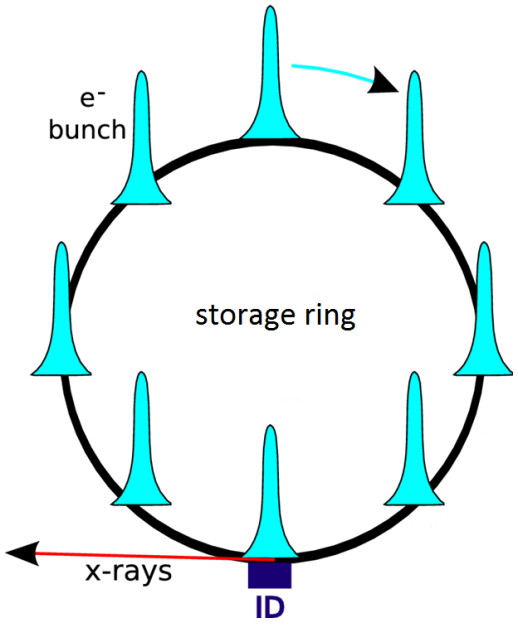

Context: typical area detector characteristics

	Phosphor-coupled CCDs	Counting PADs	Integrating PADs
Max frame rate	few Hz	~100 Hz - 10s of kHz (with reduced bit depth)	100 Hz – 1 kHz; ~10 MHz with in-pixel frame storage
Pixel size	30 – 80 µm	55 – 172 µm	25 – 200 µm
Point spread	80 – 100 µm	<< 50 µm	<< 50 µm
Read noise	0.5 – 1 ph.	suppressed	0.1 – 0.7 ph.
Max. detectable signal/pixel/frame	23,500 – 60,000 ph.	11,000 – 10^6 ph.	200 – $2x10^7$ ph.
Photon rate limit	Dictated by well depth and frame rate	10^6 – 10^7 ph/pix/s	> 10^8 ph/pix/s
(Some) Ideal applications	Standard crystallography; time-resolved experiments with fast shutters	Shutterless crystallography and fine-phi slicing; time-resolved experiments	Experiments at XFELs and high-flux storage rings; time-resolved experiments

Quantities listed in units of "photons" refer to 12 keV photons

Technology focus: Hybrid Pixel Array Detectors (PADs)

X-ray conversion layer

e.g., Si, CdTe, GaAs, Ge: 0.5 – 1 mm thick

- Large signal/x-ray
  - Single photon sensitivity
- Tight point spread
  - Charge cloud ~15-40 µm
  - Typical pixel size ~50 – 200 µm
- Prompt signal collection
  - Several ns collection

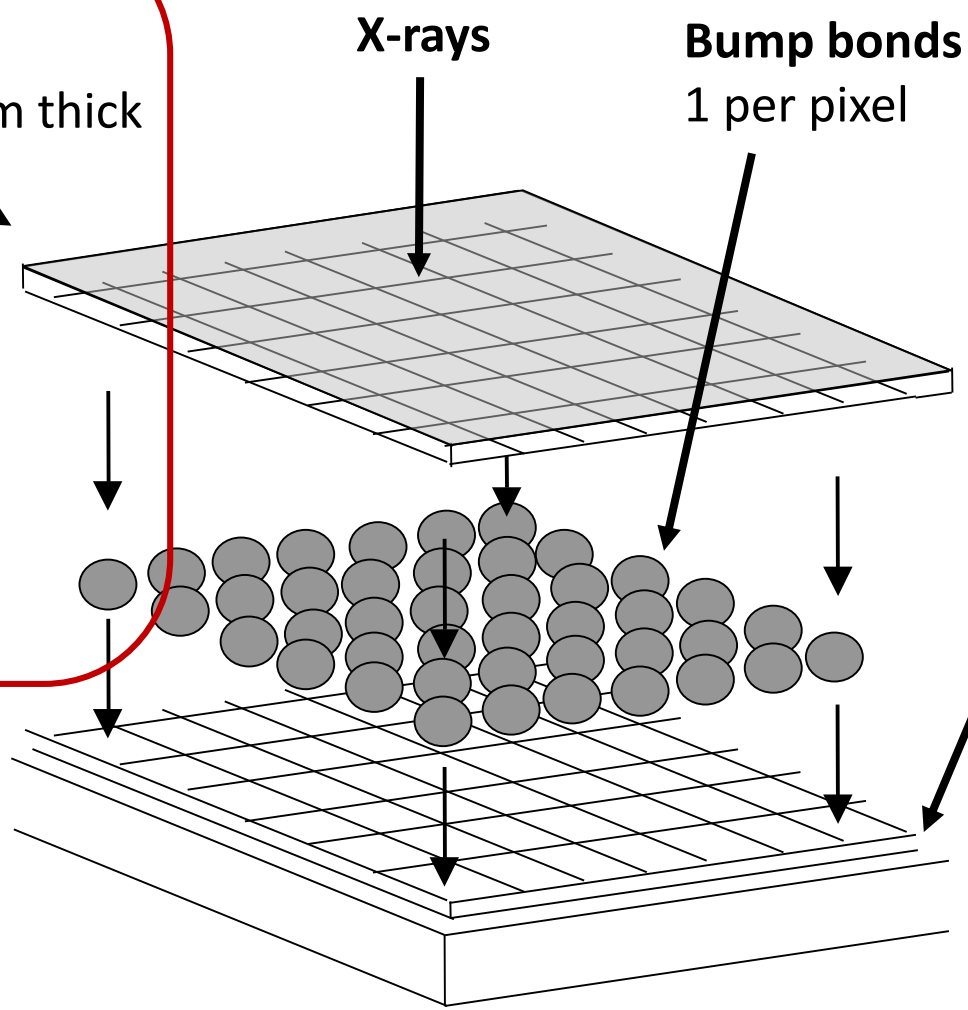

Signal processing layer

- Custom ASIC fabricated in commercial CMOS
- Possible features include:
  - Photon counting
  - In-pixel frame storage
  - …

Efficiency: Si is limiting at >20 keV

Material	ρ [g/cm³]	Z	E_{gap} [eV]	E [eV]	μ_e [cm²/Vs]	μ_h [cm²/Vs]	τ_e	τ_h
Silicon	2.33	14	1.12	3.6	1500	400	>1ms	>1ms
Ge	5.33	32	0.67	2.9	3900	1900	>1ms	>1ms
GaAs	5.32	31,33	1.42	4.3	4000	300	~10ns	~ 1ns
CdTe	5.85	48,52	1.44	4.4	1100	90	~ 3µs	~ 2µs

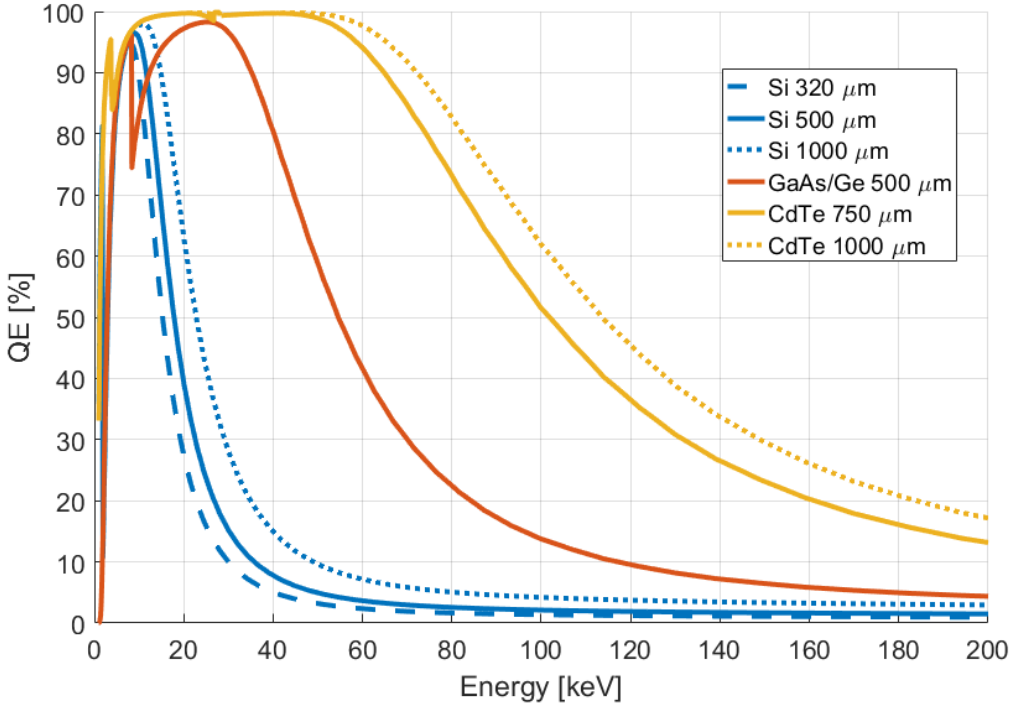

Biggest drawbacks:

Si: low ρ,Z
=> low QE at high E

Ge: low E_{gap}
=> needs cryo cooling

GaAs: low τ
=> energy dependence

CdTe: slow; material polarization
=> speed, complexity

Investigations into CdTe, Ge

CdTe vs. Si: Radiography at > 20 keV

750 µm In-Schottky CdTe (Acrorad), bump-bonding by Oy Ajat

Ag tube @ 47 kV, average of 1000 images

CdTe

1s total exposure

0.2 mA tube current

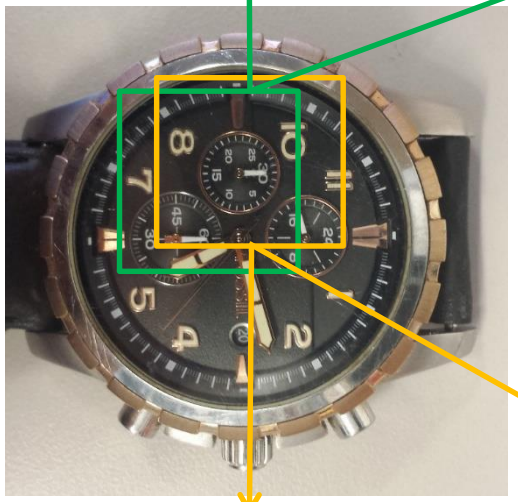

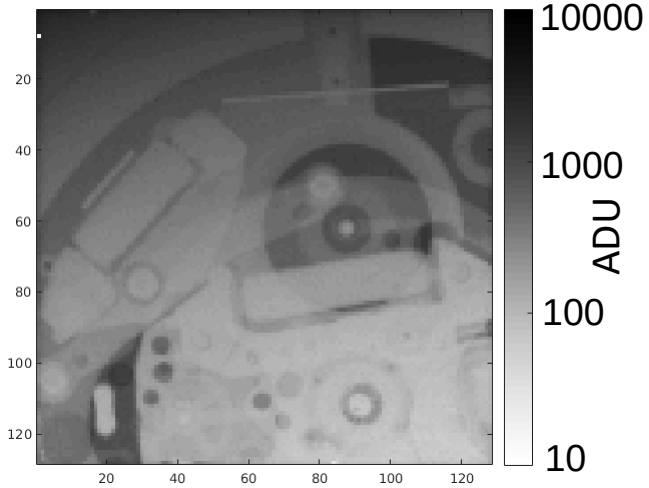

Si

8.5min total exposure

0.9 mA tube current

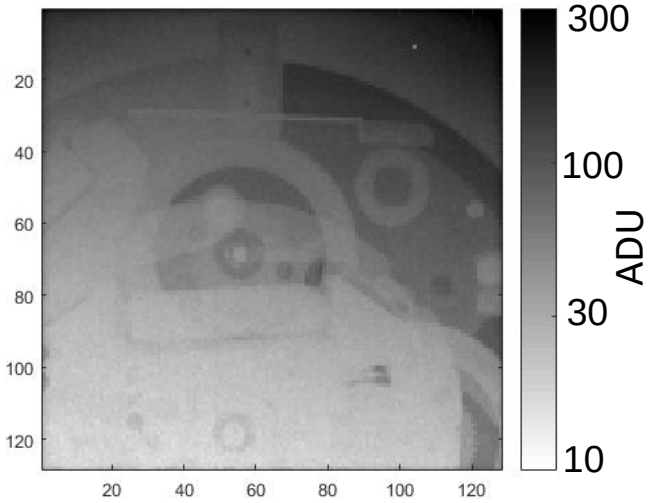

Becker *et al.*, *JINST* **11** (2016) P12013

Ge

Early-stage collaboration with MIT Lincoln Laboratory

Current effort: planar detectors (128 × 128, 150 µm pitch)

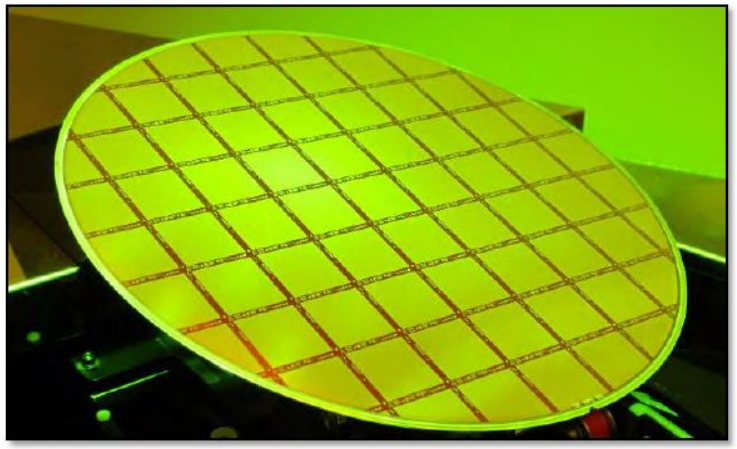

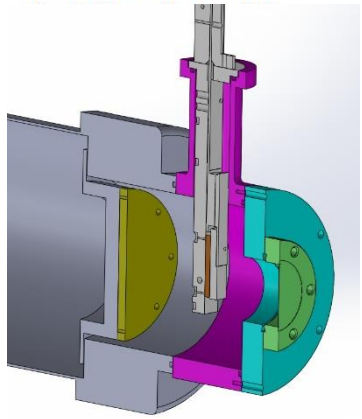

Images courtesy C. Leitz

Technology focus: Hybrid Pixel Array Detectors (PADs)

X-ray conversion layer

e.g., Si, CdTe, GaAs, Ge: 0.5 – 1 mm thick

- Large signal/x-ray
  - Single photon sensitivity
- Tight point spread
  - Charge cloud ~15-40 µm
  - Typical pixel size ~50 – 200 µm
- Prompt signal collection
  - Several ns collection

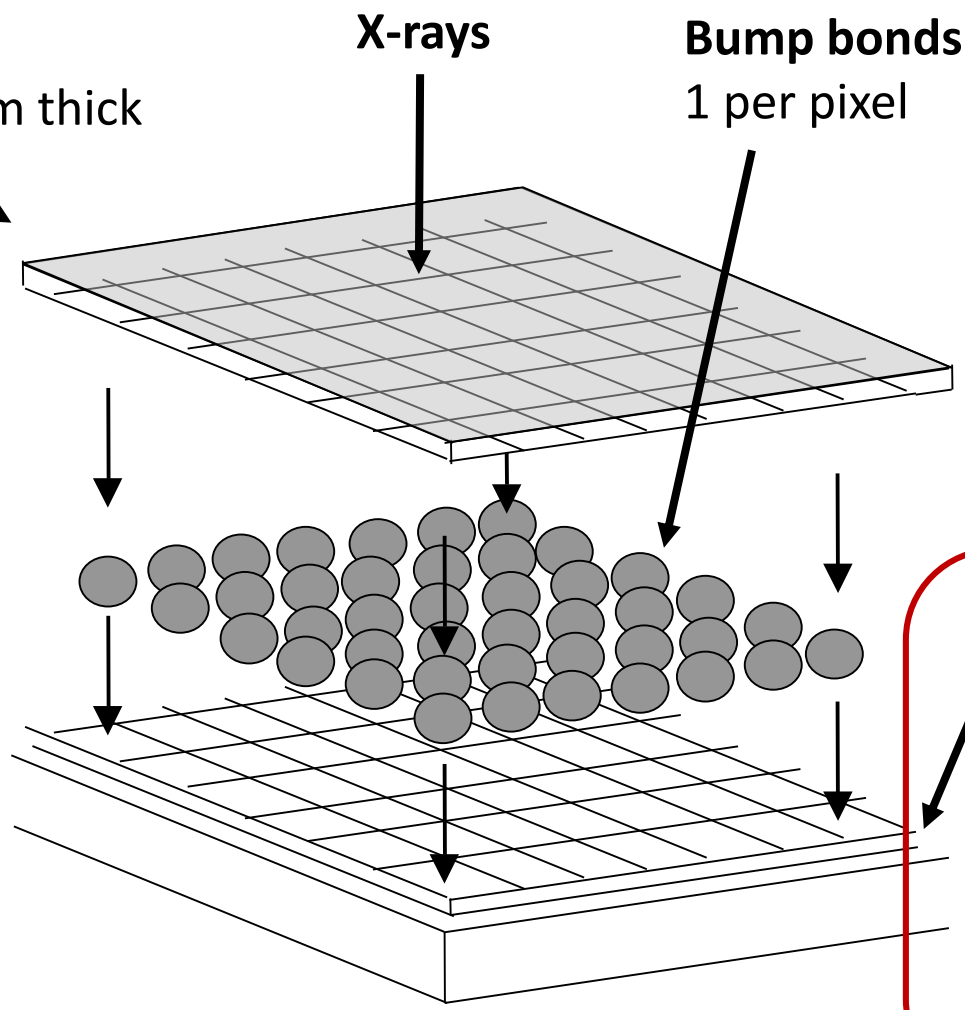

Signal processing layer

- Custom ASIC fabricated in commercial CMOS
- Possible features include:
  - Photon counting
  - In-pixel frame storage
  - …

Counting vs. integrating

Photon-counting PADs

- Front end counts each x-ray individually
- Suppress pixel read noise and dark current
- Count-rate limited to ~10^6 -10^7 x-rays/pix/s (depending on source characteristics)
- Pixel well capacity (max. detectable signal per frame) set by counter depth

Photon-integrating PADs

- Front end measures the integrated energy deposited in the sensor during a frame
- Dark current must be subtracted; care required to *minimize* read noise
- Count-rate bottleneck avoided - Only option for most XFEL experiments and intense single-bunch imaging.
- Well-depth limited by pixel storage capacity to ~1000's of photons/pixel/frame
  - …but well-depth extension techniques can boost this to >10^7 x-rays/pixel/frame

Outline

- Detector activity at Cornell
- Photon-integrating hybrid pixel array detectors for x-ray science
  - Scientific aims
  - Technology focus
- **What's happening in the Gruner detector development group:**
  - **Wide dynamic range imaging:**
    - MM-PAD
  - **Burst-mode imaging:**
    - Keck-PAD

Achieving wide dynamic range

…using linear methods

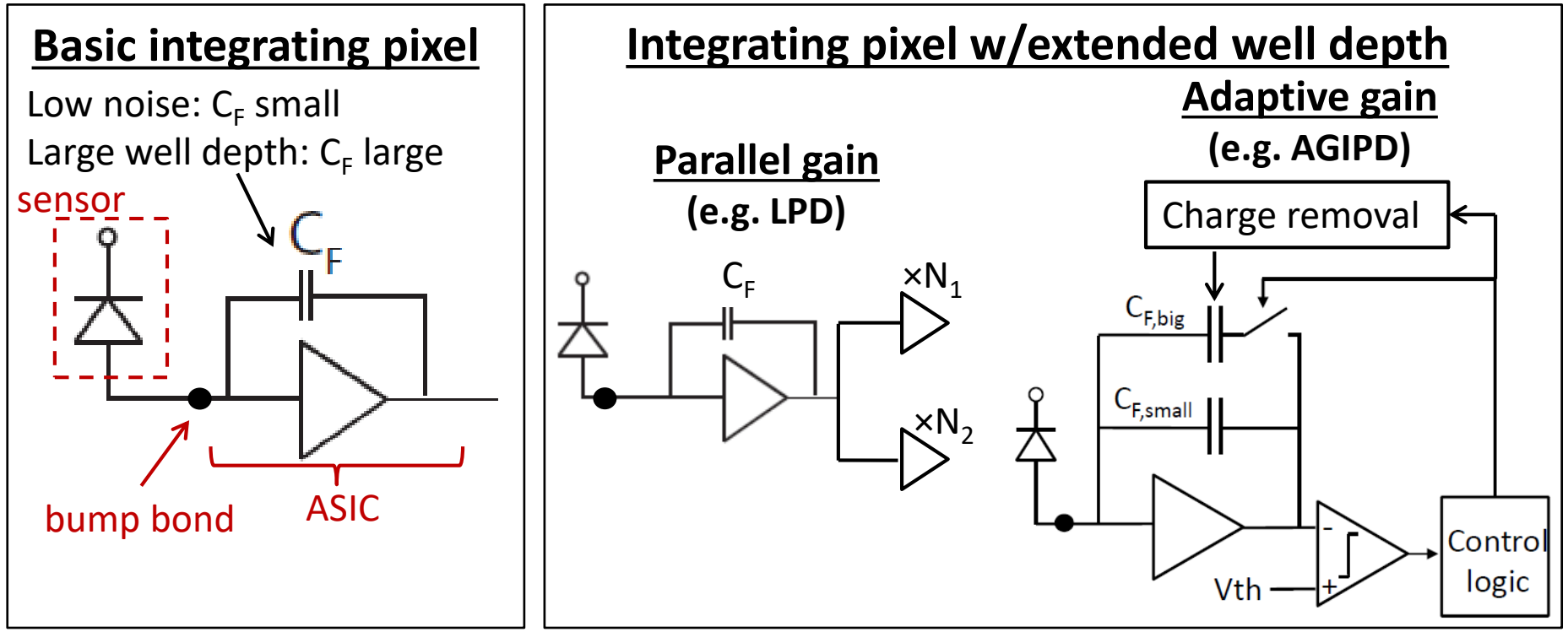

- Purely integrating pixel: well depth limited by feedback capacitance
  - Voltage swing typically ~1 V, feedback capacitance up to 2 fF/µm^2
    - **~6x10^4 8-keV ph/pix** max in 100 x 100 µm pixel
- Additional **well-depth extension** techniques needed
  - One option: **charge removal**

Mixed-Mode PAD (MM-PAD)

Mixed analog and digital readout provides **extended dynamic range**

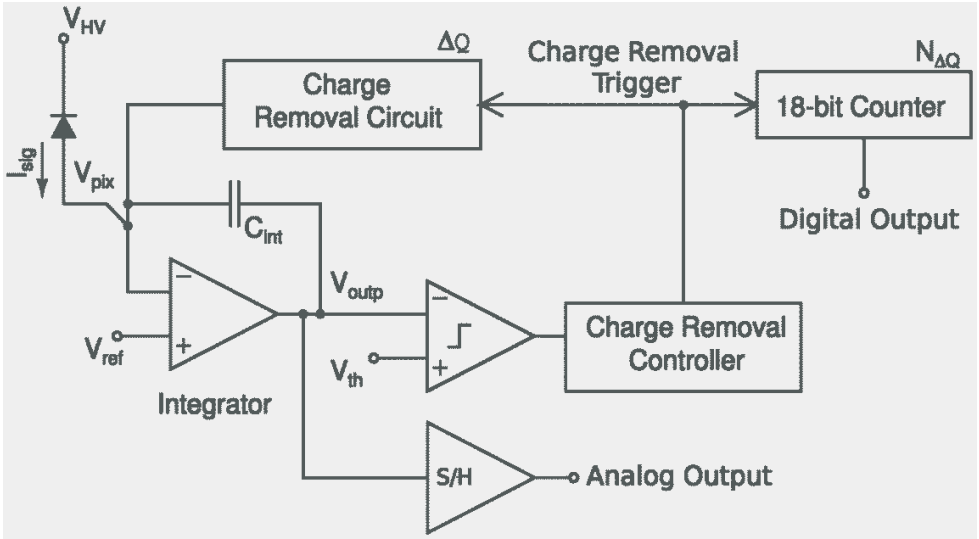

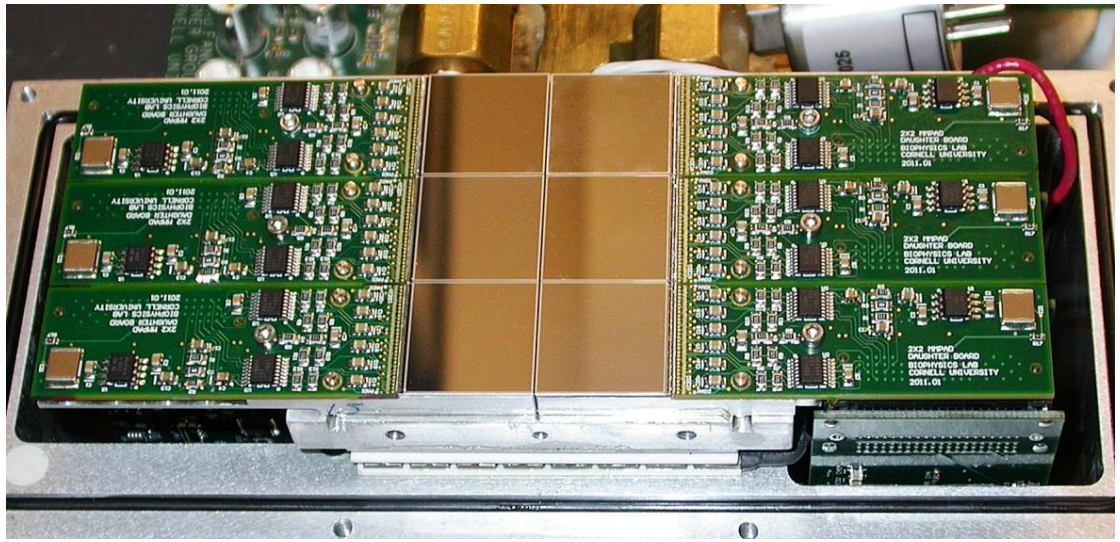

Read time (frame rate)	0.86 ms (1.1 kHz)
Read noise (RMS)	0.16 photons @ 8 keV
Well capacity	4.7 x 10^7 photons/pix/frame @ 8 keV
Sustained photon rate	>10^8 ph/pix/s
Instantaneous photon rate	> 10^{12} ph/pix/s (e.g. ~200 ph/pix/pulse)

Tate *et al., Journal of Physics: Conference Series* **425** (2013) 062004

MM-PAD: applications

Wide dynamic range gives **extraordinary experimental flexibility**

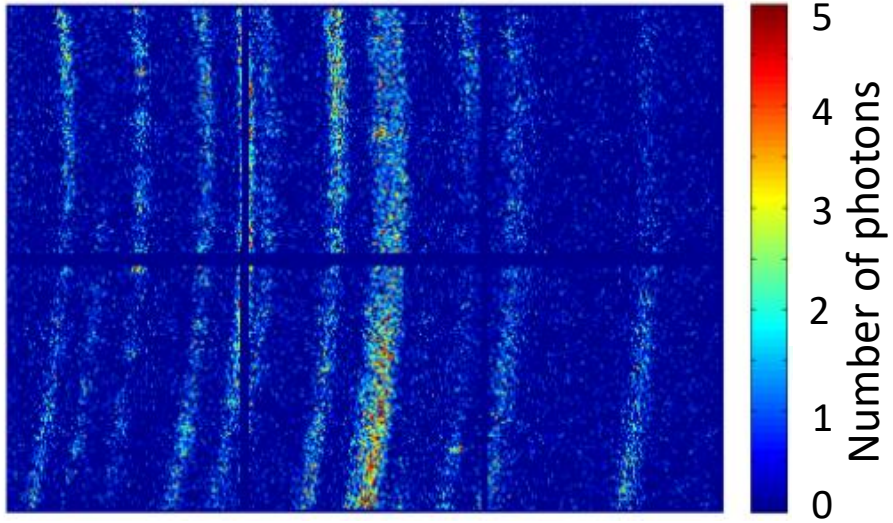

Example #1: materials science

- Capture diffraction from Ni_3Al multilayer foil undergoing an exothermic reaction @ 2 ms per frame
- **5 photons per pixel full scale**
- **Single-photon sensitivity is key**

(CHESS: Hufnagel group at Johns Hopkins)

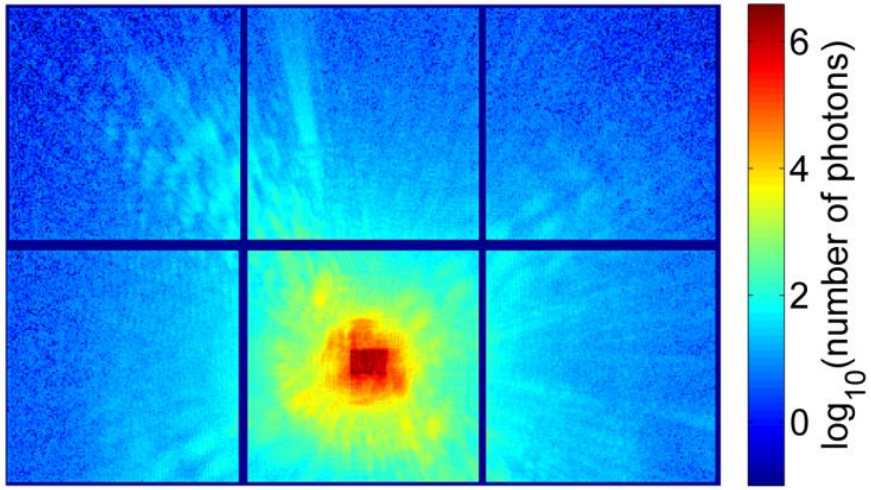

Example #2: coherent diffractive imaging

- Capture scattering pattern from Au test object @ 100 ms per frame
- **10^6 photons per pixel full scale**
- **Dynamic range and tolerance of high flux are key**

(PETRA III: Mancuso group from European XFEL – see Giewekemeyer *et al., Journal of Synchrotron Radiation* (2014) **21,** 1167-1174)

CdTe-MM-PAD: Residual Stress in Stretched Ti-7Al

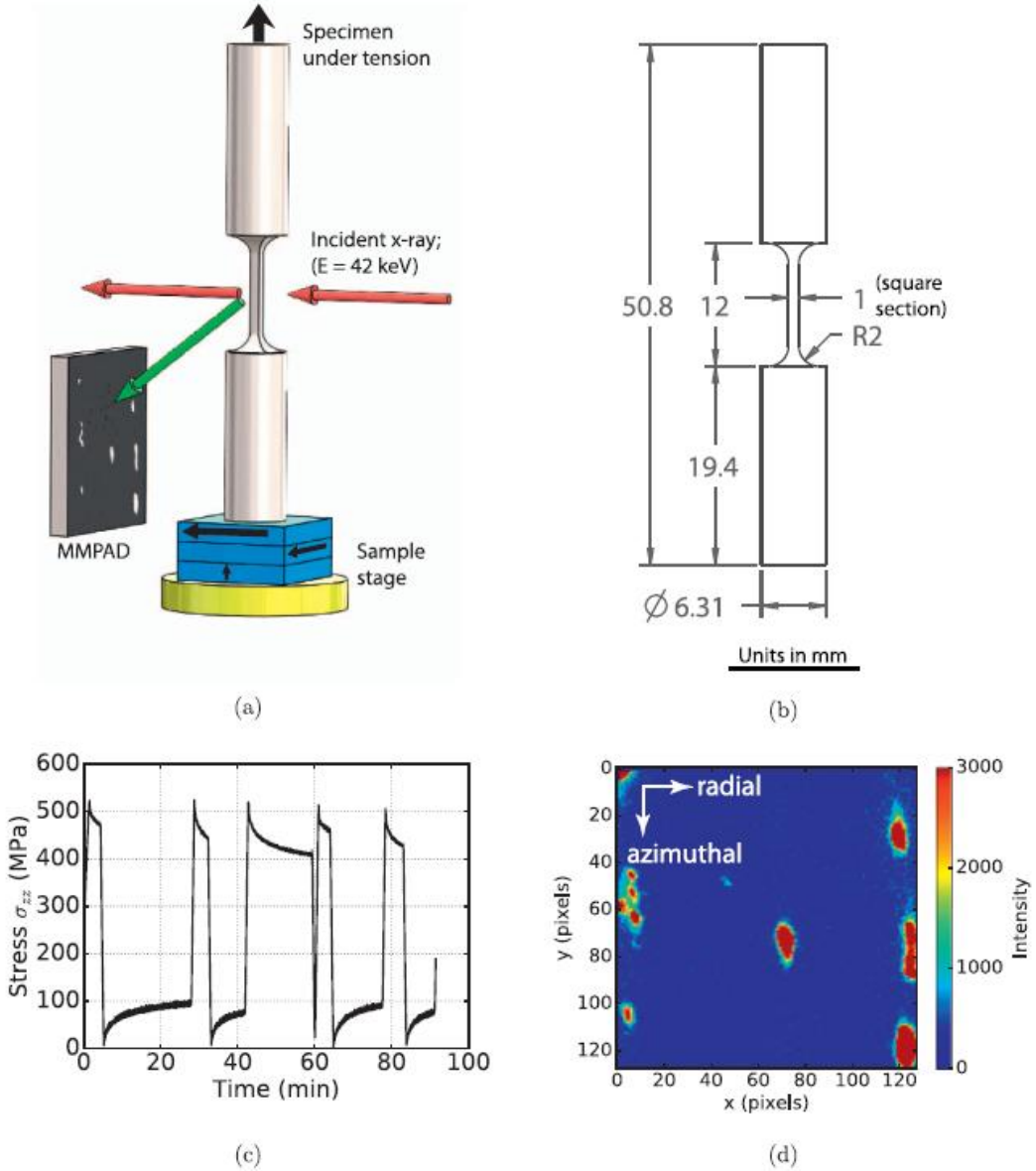

- **Beamline:** CHESS F2
- **Energy:** 42 keV
- **Collaborators:** Beaudoin group @ U. Illinois, Peter Ko (CHESS)
- **Goal:** Probe grain-level deformation mechanisms and residual stress in polycrystalline Ti-7Al alloy under applied stress gradient

Chatterjee et al., *J. Mechanics & Physics of Solids* **109** (2017) 95

Present MM-PAD: Limitations

- **Readout limited to ~0% duty cycle at max frame rate of 1.1 kHz**

- **Charge removal circuitry runs at 2 Mhz max**
  - 4×10^8 8 keV x-rays/pix/s max sustained rate

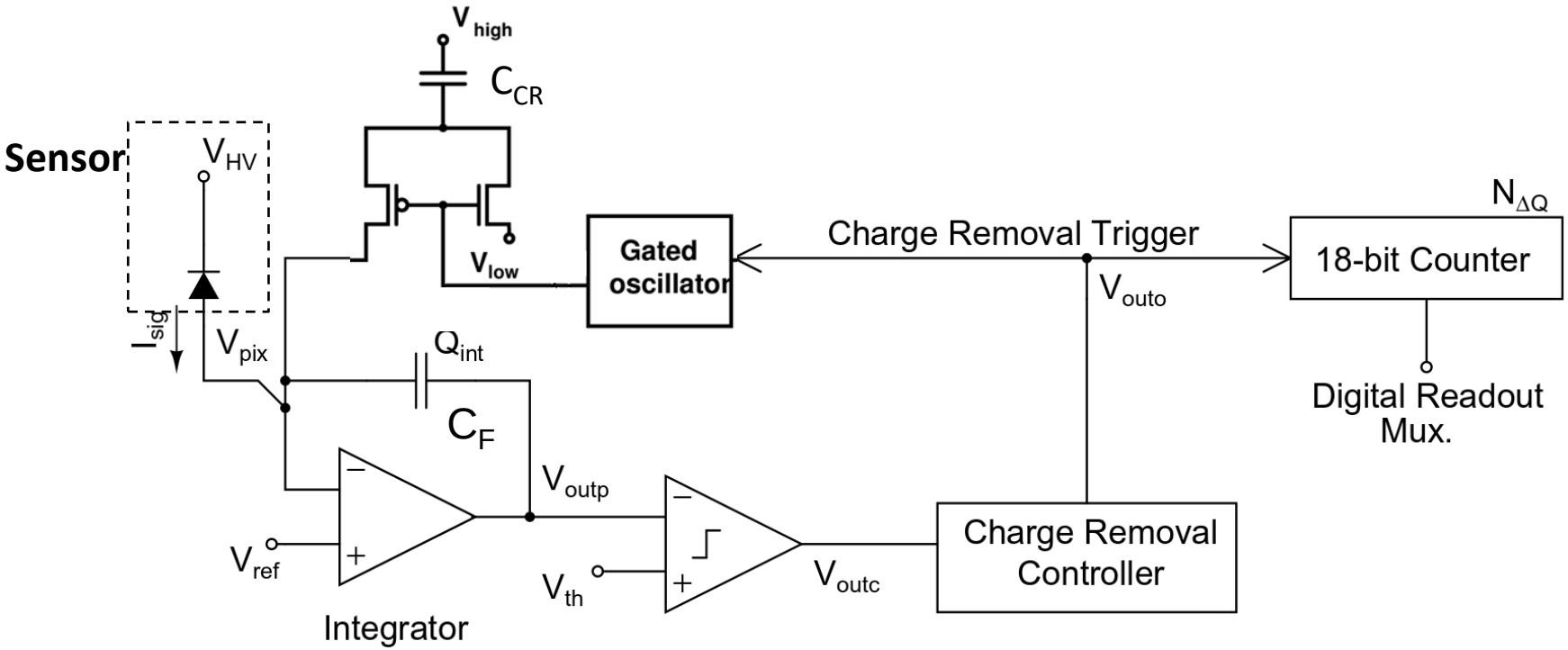

An intermediate step: MM-PAD-2.0

improvements to MM-PAD pixel

Developed in TSMC 180nm process via 3 MPW submissions over 2014-2017

Adaptive gain

Maintain high SNR at low signal levels while larger low-gain cap increases sustained flux limit

Dual track/hold circuit

Differential output

Expose-during-readout operation

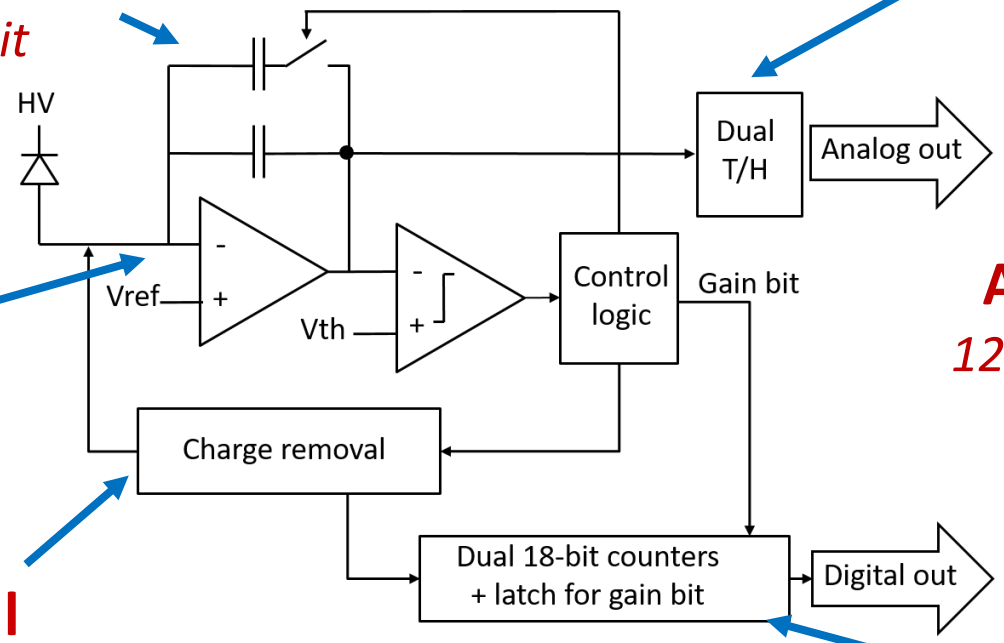

Class AB amplifier

higher slew rate

Faster readout:

ASIC capable of < 100 ns/pixel

128 x 128 pixels in 16 channels: ~10 kHz

8 channels: ~5 kHz

4 channels: ~1 kHz

Faster charge removal

100 MHz max operation

Dual in-pixel counters

Expose-during-readout operation

MM-PAD-2.0 characterization

- **High-current testing:**
  - External current source (no sensor)
  - Good performance up to **>10^{10} ph/pix/s**

- **Low-current testing:**
  - Measured noise: **5.5 keV**
  - Calculations indicate majority of noise is from charge injection from pixel reset switches
  - Simulated amplifier read noise: **~1.3 keV**

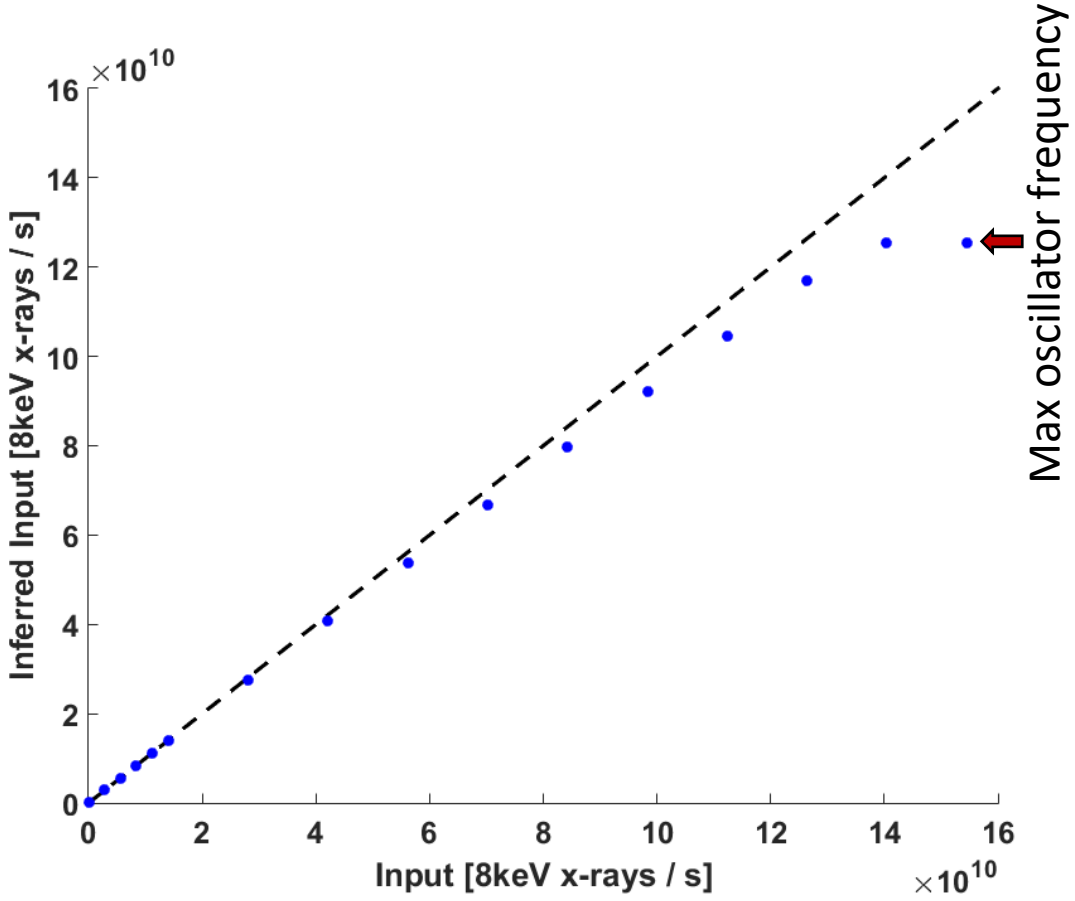

Weiss et al., *IEEE Trans. Nucl. Sci.* (2017) **64,** 1101-1107
Weiss PhD. Thesis (2017), Cornell University, USA

CU-APS-PAD "MM-PAD-2.1"

- Collaboration with detector group at APS
  - APS: firmware, support electronics
  - Cornell: ASIC
- Further update on MM-PAD-1.0 design

Specification	MM-PAD-1.0 (8 keV equivalent units)	MM-PAD-2.1 target (20 keV equivalent units)
# of pixels per chip	128 x 128	
Pixel size	150 µm	
Sensor	Si	CdTe
Electron-collection capability?	No – holes only	Yes – collect electrons or holes
Frame rate	1.1 kHz	$\geq$1.1 kHz
Duty cycle	0% at max frame rate	$\geq$ 90%
Read noise	0.16 photon	$\leq$ 0.1 photon
Well capacity	4.7×10^7 photons	10^8 photons
Instantaneous count rate	> 10^{12} ph/s/pix	> 10^{12} ph/s/pix
Sustained count rate	> 10^8 ph/s/pix	> 10^9 ph/s/pix

MM-PAD-2.1: July 2018 submission

Modified front-end

amplifier mods: *lower read noise*

resized reset switches: *lower charge injection noise*

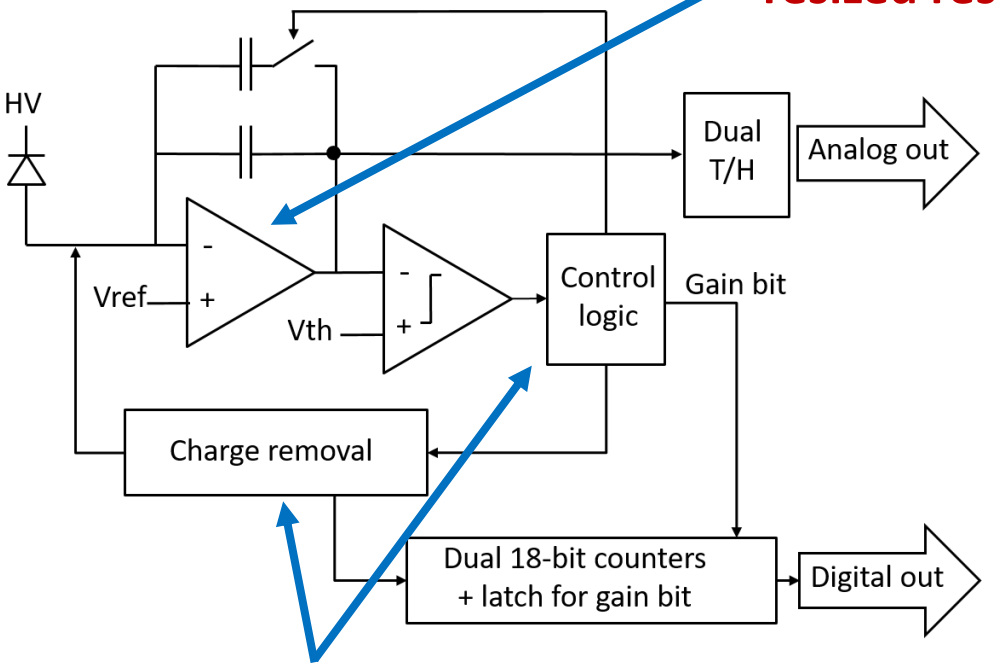

Modified charge removal circuitry

electron and hole collection compatibility

Additional features:

- LVDS RX/TX for digital readout
- On-ASIC chip control register to simplify pinout
- Diagnostic bank for characterizing analog readout chain
- Programmable edge digital test pattern for characterizing digital readout chain

MM-PAD-2.1 test system

- 16 x 16 pixel array containing 4 pixel variants:
  - With/without front-end protection diode (1)
  - With/without charge-injection compensation on pixel reset switch (2)

- Stud-bonded to Si and CdTe sensors (Polymer Assembly Technology, Rockford, MI)

- Vacuum housing with x-ray transparent window for testing

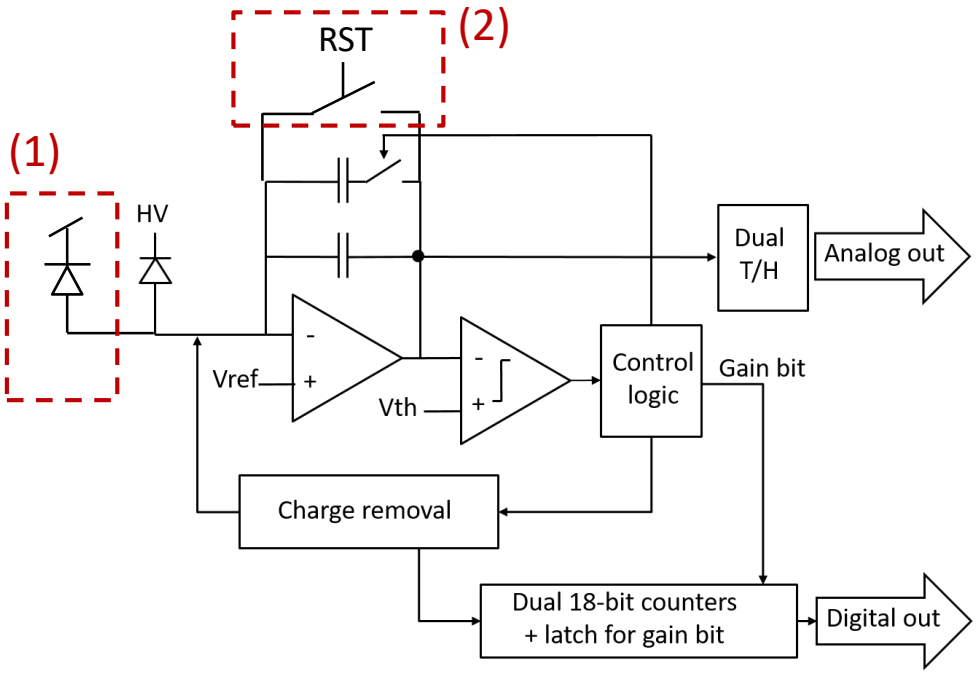

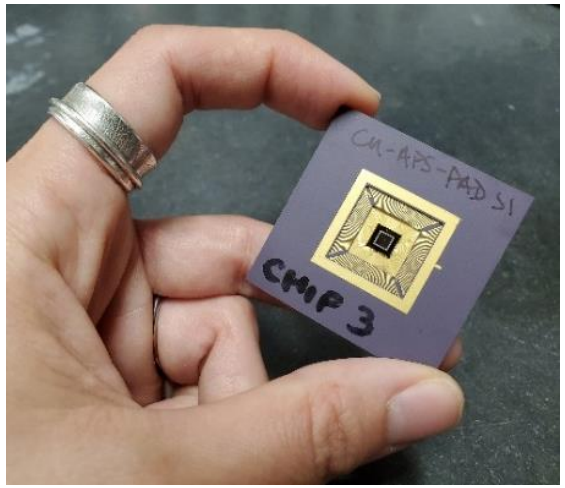

Functionality

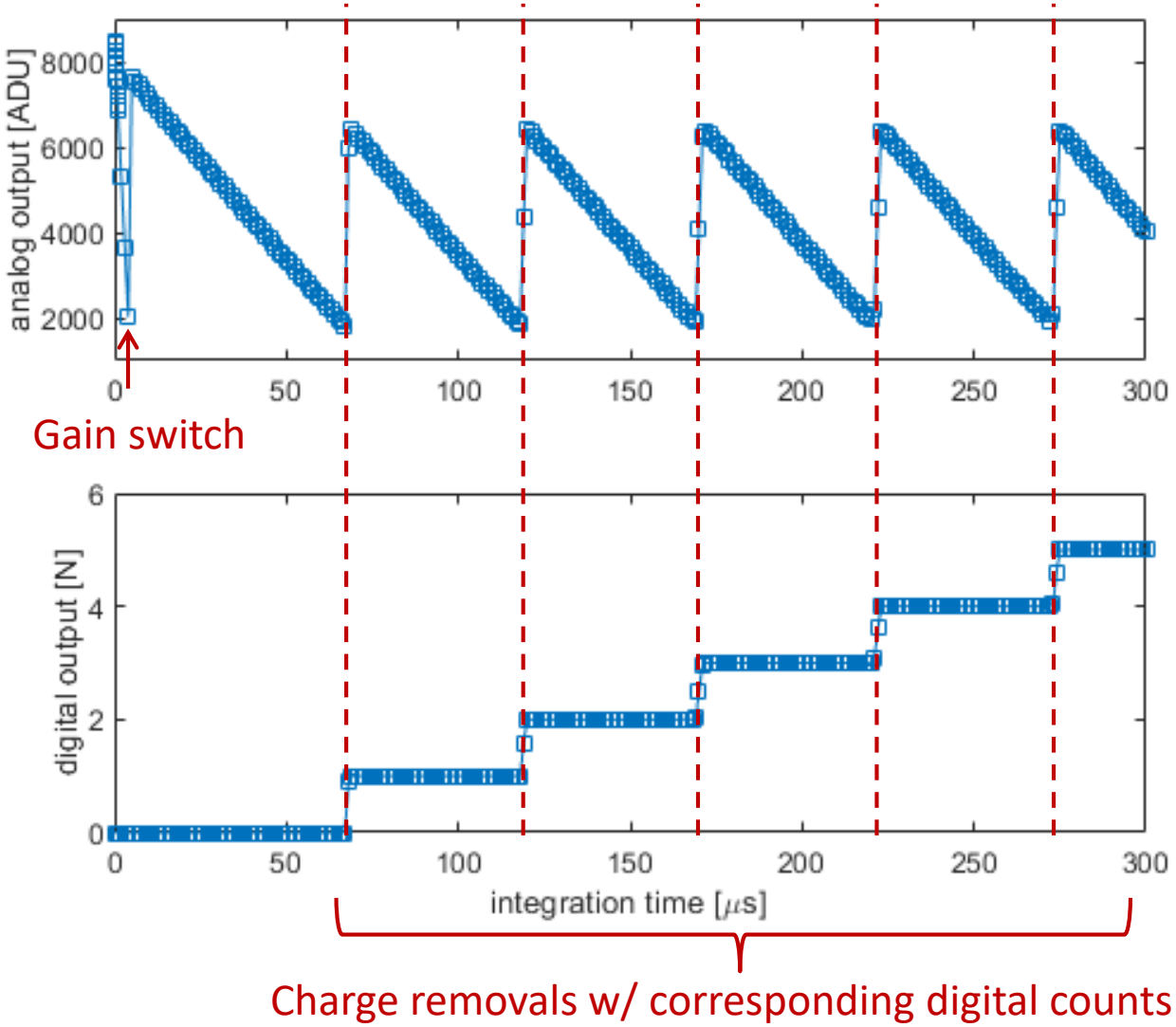

Noise

- 50W silver tube source
- Al filter + graphite monochromator used to isolate 22.2 keV Kα line
- W pinhole mask used to isolate pixels
- Scan detector position in ¼-pixel steps to ensure ~every pixel is isolated by a pinhole in at least one set of images
  - 2000 dark and 50,000 x-ray frames acquired at each position
- Histogram analog values recorded by a given illuminated pixel; fit to a sum of Gaussians

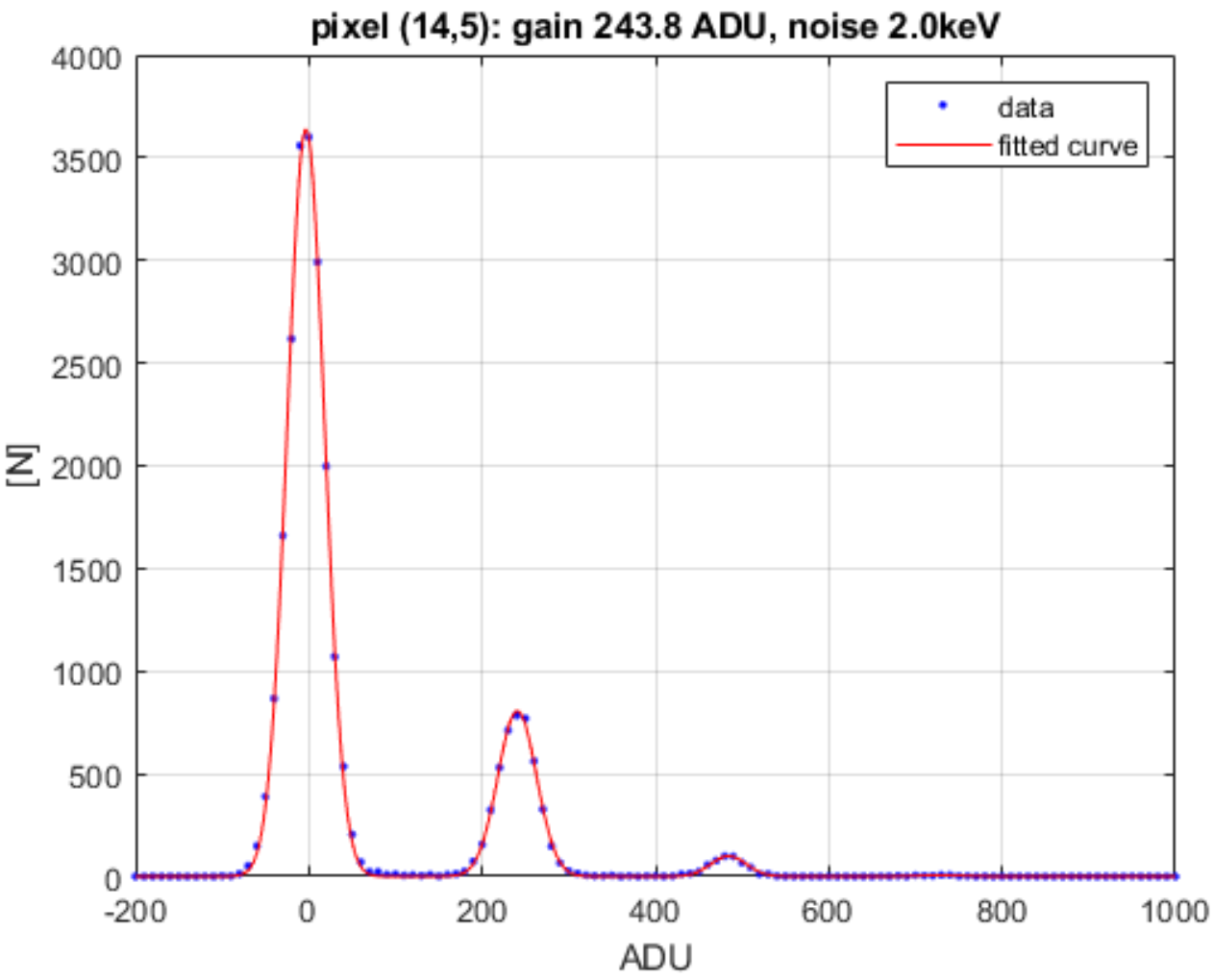

MM-PAD-2.1: high-flux characterization

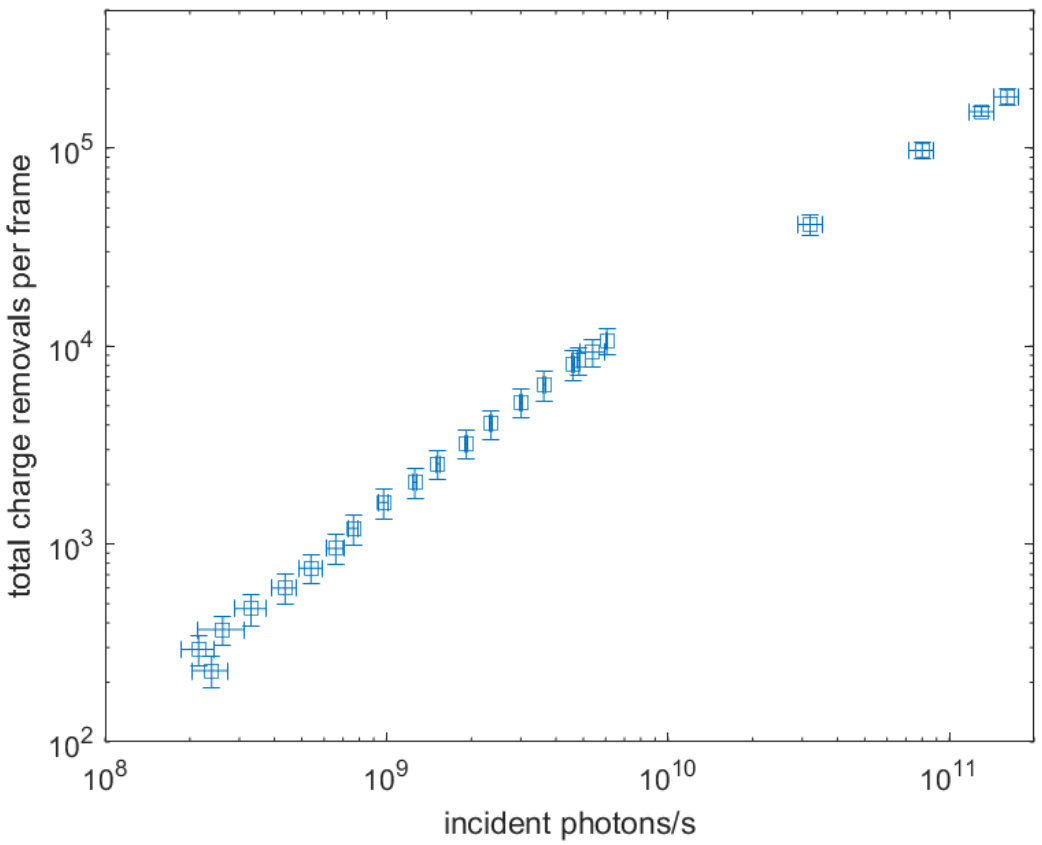

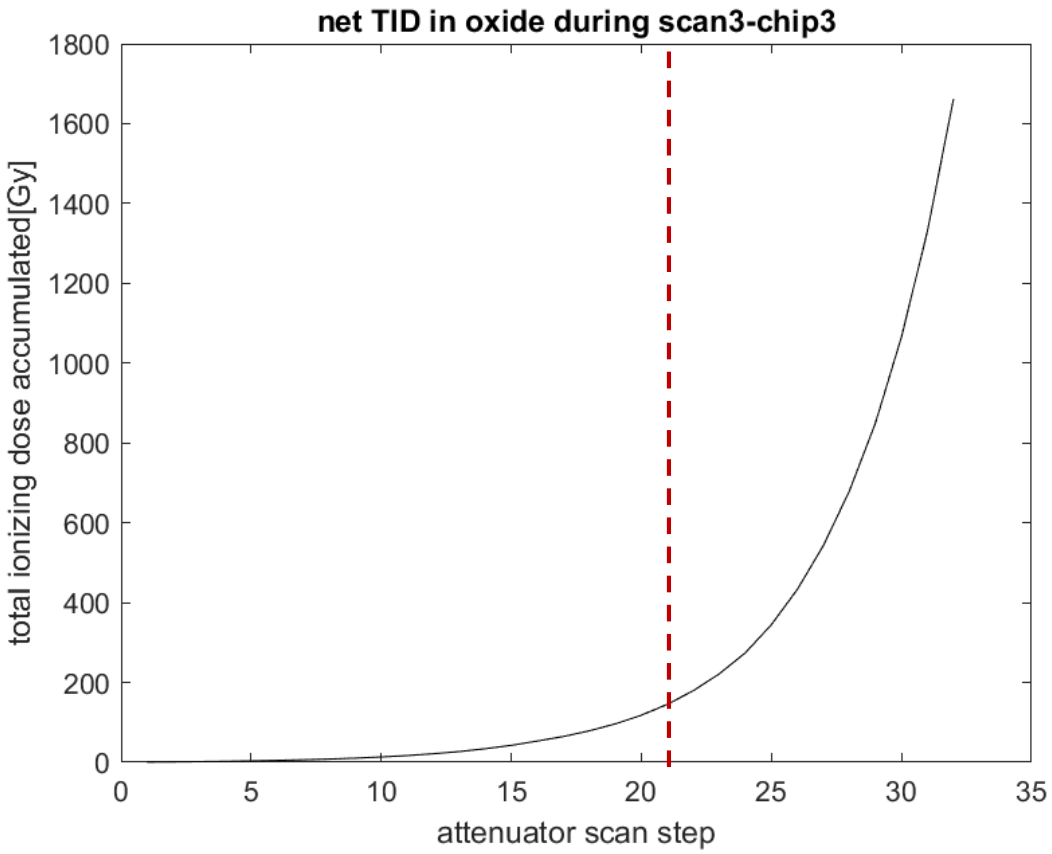

- APS 6-ID-C
- 10 keV x-ray energy, spot size ~2x1.5 pixels FWHM
- **Linear response up to ~10^{10} ph/s**

- Onset of radiation damage **to ASIC oxide**: ~118 Gy(SiO2)
- At 20 keV and with a 750 µm CdTe sensor, this is equivalent to **~10^6 s** at the maximum specified flux of 10^9 ph/pix/s

Outline

- Detector activity at Cornell
- Photon-integrating hybrid pixel array detectors for x-ray science
  - Scientific aims
  - Technology focus
- **What's happening in the Gruner detector development group:**
  - **Wide dynamic range imaging:**
    - MM-PAD
  - **Burst-mode imaging:**
    - Keck-PAD

Keck-PAD

Integration caps -

300, 466, 500, 700 fF

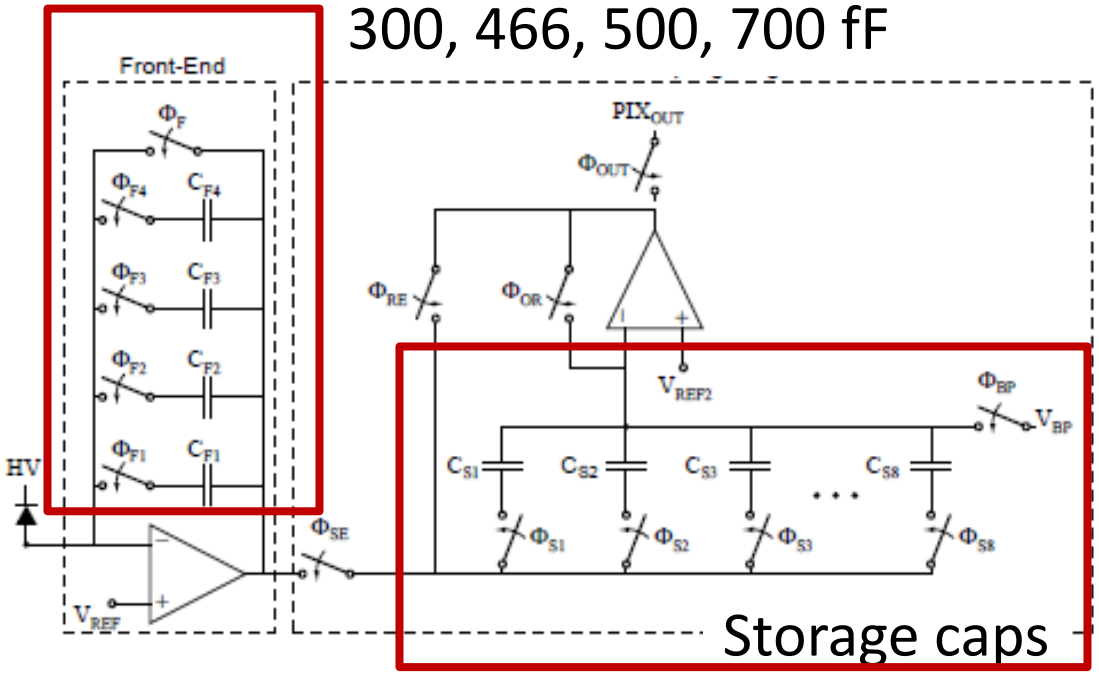

In-pixel frame storage provides down to ~**100 ns spacing between stored frames (~10 MHz)**

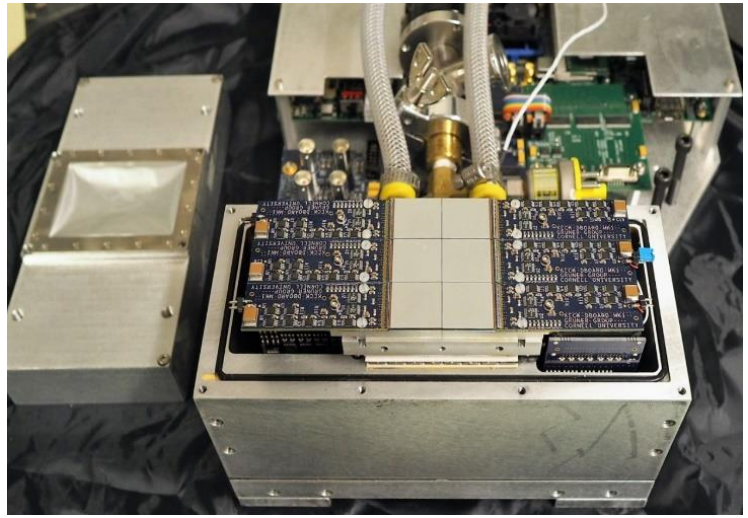

Read time	0.86 ms/frame
Storage caps/pixel	8
Read noise	1 photon @ 8 keV (C_F = 300 fF) 4 photons @ 8 keV (C_F = 1966 fF)
Well capacity	1112 photons @ 8 keV (C_F = 300 fF) 7288 photons @ 8 keV (C_F = 1966 fF)

Si Keck-PAD: single-bunch-train imaging at CHESS

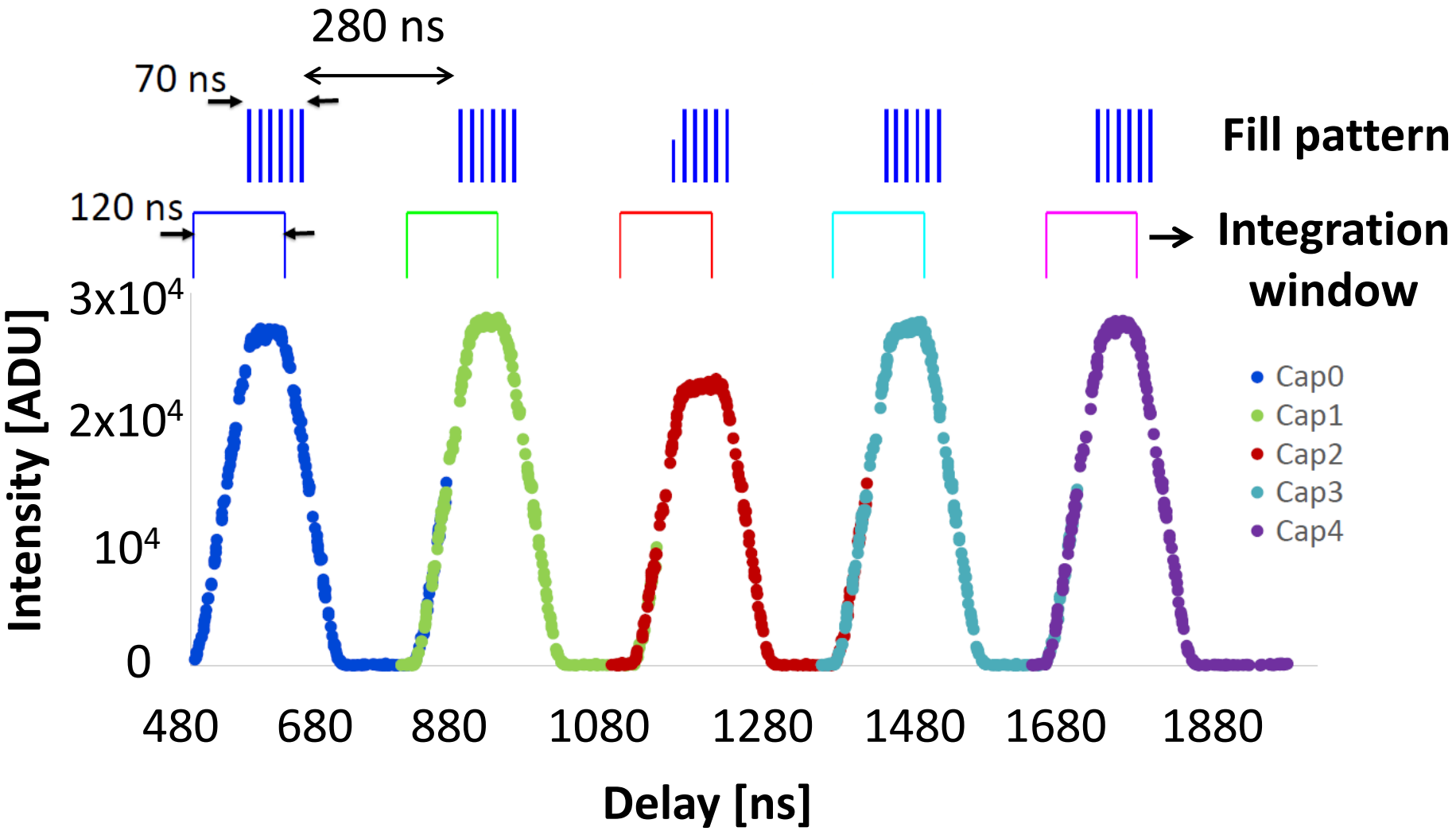

CdTe Keck-PAD

- **Data:** Gd3Ga5O12 Laue diffraction @ CHESS A1
- **Energy:** white beam, up to 160 keV
- **Integration time:** 100 ns (200 ns image period)
- **Sensor:** CdTe, In/Pt Schottky, h collection

Gd fluorescence (~43 keV) on Si Keck module

Bragg spot on CdTe Keck module, ~90-120 keV

Gd fluorescence on CdTe Keck module

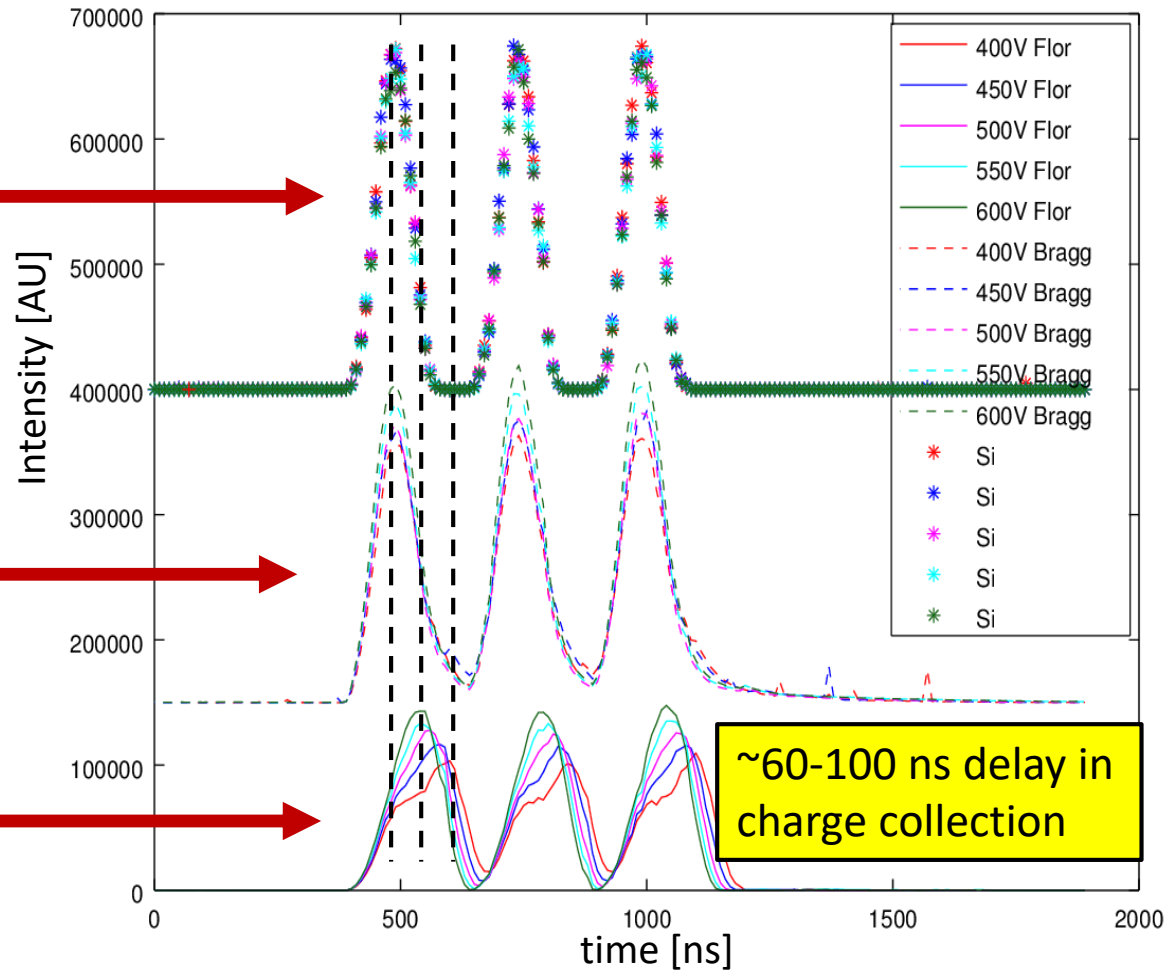

~60-100 ns delay in charge collection

Is CdTe fast enough for single bunch imaging?

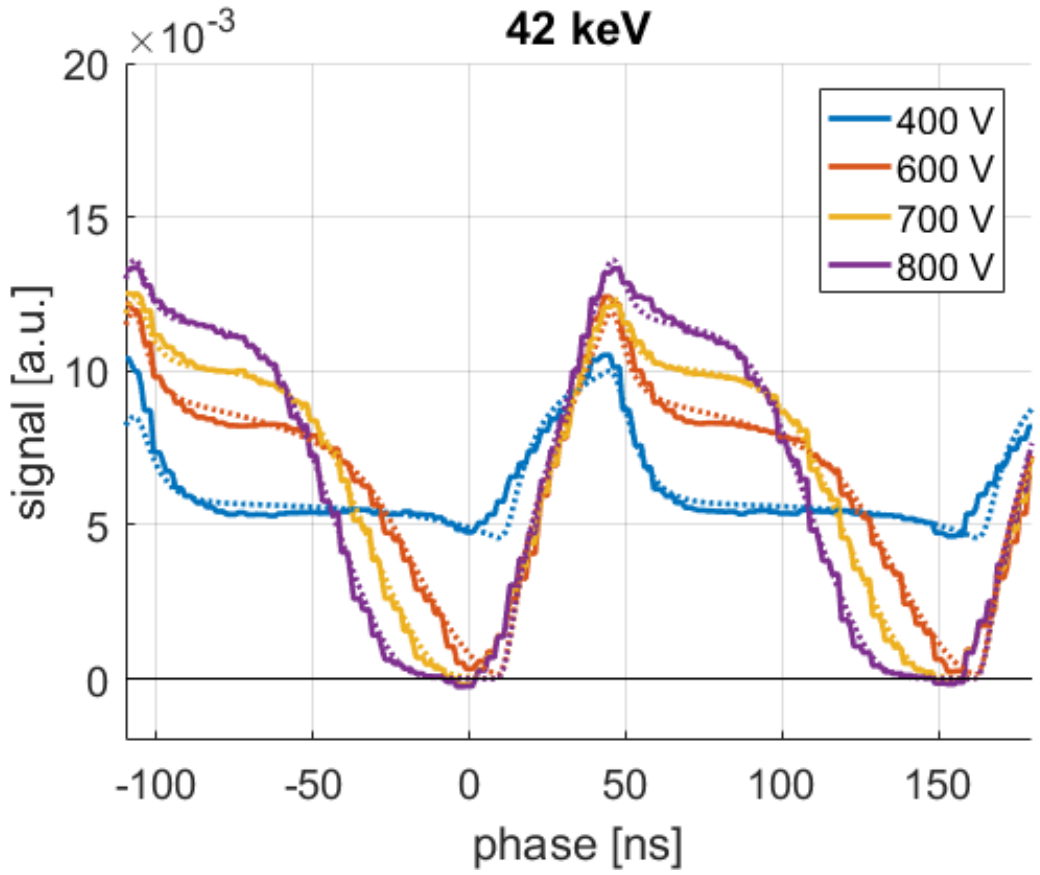

Beamline: APS 35IDE (DCS) – 153 ns bunch separation

Energy: 7.1 keV fundamental, with harmonics up to >120 keV

Measure isolated diffraction spots from Cu

Measured response (solid) in excellent agreement with drift & diffusion simulations (dotted)

Becker et al., *JINST* **12** (2017) P06022

Completed Detailed Analysis of Schottky hole-collecting CdTe for "Static" and "Dynamic" Behavior

JINST **11** (2016) P12013

Characterization of CdTe sensors with Schottky contacts coupled to charge-integrating pixel array detectors for X-ray science

J. Becker,[a,b] M.W. Tate,[a] K.S. Shanks,[a] H.T. Philipp,[a] J.T. Weiss,[a,b] P. Purohit,[a] D. Chamberlain,[b] J.P.C. Ruff[b] and S.M. Gruner[a,b,1]

[a] *Laboratory of Atomic and Solid State Physics, Cornell University, Ithaca, NY 14853, U.S.A.*

[b] *Cornell High Energy Synchrotron Source (CHESS), Cornell University, Ithaca, NY 14853, U.S.A.*

JINST **12** (2017) P06022

Sub-Microsecond X-Ray Imaging Using Hole-Collecting Schottky type CdTe with Charge-Integrating Pixel Array Detectors

Julian Becker,[a,b] Mark W. Tate,[a] Katherine S. Shanks,[a] Hugh T. Philipp,[a] Joel T. Weiss,[a,b] Prafull Purohit,[a] Darol Chamberlain,[b] and Sol M. Gruner[a,b,c,1]

[a] *Laboratory of Atomic and Solid State Physics, Cornell University, Ithaca, NY 14853,USA*

[b] *Cornell High Energy Synchrotron Source (CHESS), Cornell University, Ithaca, NY 14853, USA*

[c] *Kavli Institute at Cornell for Nanoscale Science, Cornell University, Ithaca, NY 14853, USA*

Conclusions

- CdTe can be used for many Keck- and MM-PAD experiments
- It is fast enough for 153 ns APS experiments if bias voltage is high enough
- Behavior is much more complex than Si - users need to understand and factor in limits to get good scientific results

Summary

- **Si-sensor MM-PAD and Keck-PAD are proven x-ray imagers**
  - **2x3 module (256x384 pix) prototypes delivering excellent science**
  - **Several experiments are in the works**
- **Ongoing work**
  - **ASIC upgrades**
    - MM-PAD: increased sustained flux capability, expose-while-readout capability, higher frame rates
    - Keck-PAD: 27 storage capacitors, lower noise, other improvements to ease readout
  - **Investigating new sensors for high-energy imaging**
    - Schottky hole-collecting CdTe – works, but requires care
    - Ongoing work: Ge collaboration with Lincoln Labs
  - **Commercialization:**
    - FEI/Thermo Fisher is commercializing an MM-PAD variant for STEM
    - Sydor Instruments is commercializing the Keck- and MM-PAD for x-ray

Acknowledgements

- Cornell detector group:
  - Sol Gruner
  - Divya Gadkari
  - Martin Novak
  - Hugh Philipp
  - Jonathan Okasinski
  - Kate Shanks
  - Mark Tate
  - Julia Thom-Levy
- Support:
  - U.S. Department of Energy
  - Keck Foundation
  - U.S. National Institutes of Health
  - U.S. National Science Foundation
  - Kavli Foundation
  - DTRA
- Past Detector Group Members:
  - Sandor Barna
  - Julian Becker
  - Tom Caswell
  - Darol Chamberlain
  - Alper Ercan
  - Marianne Hromalik
  - Lucas Koerner
  - Prafull Purohit
  - Matt Renzi
  - Guiseppe Rossi
  - Dan Schuette
  - Joel Weiss
- Collaborators:
  - Sydor Instruments
  - FEI/Thermo Fisher
  - Argonne National Lab
    - Nino Miceli
    - Mike Hammer
    - John Weizeorick